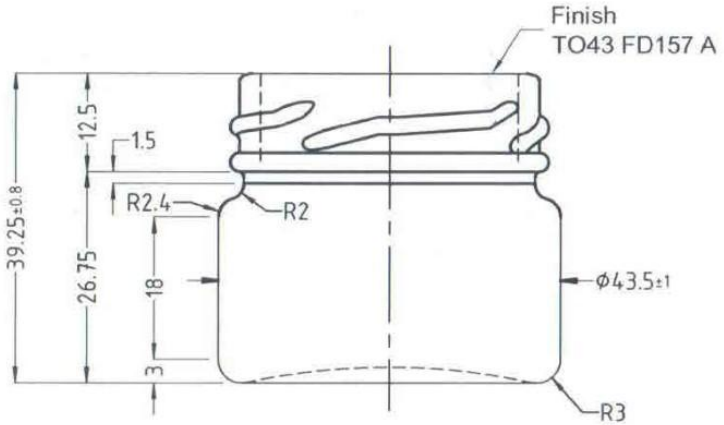

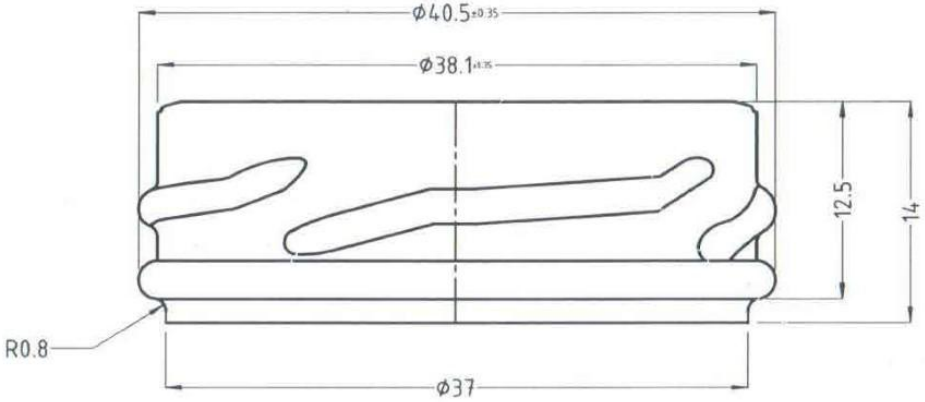

Detail Finish

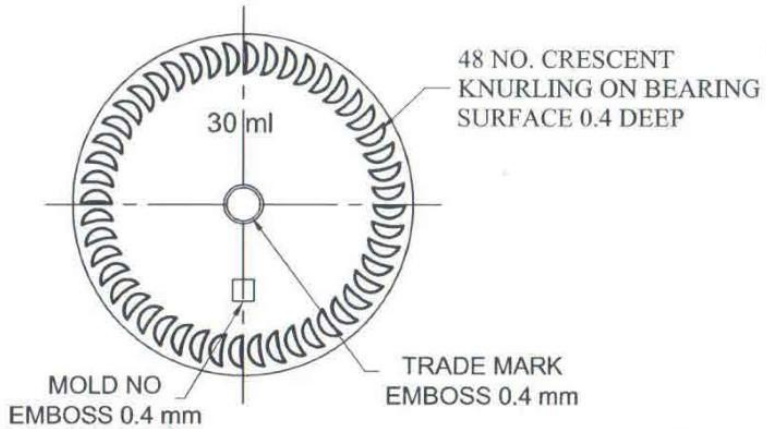

CUSTOMER APPROVAL : ----------

DATE : ---------

PROCESS	PB						
MINIMUM THROUGH BORE	N.A						
VACUITY	N.A						
GLASS COLOUR	FLINT	No.	REV. No.	REVISION	DATE	REV.BY	
MAXIMUM DEPTH OF STANDARD ENGRAVING	N.A	FILL-POINT CAP.					PRODUCT NAME: Jar 30 ml
MAX. GAS VOLUMES	N.A	BRIMFUL CAP.	31.5 ±1.4 ml				CUSTOMER:
REF.DRG No. EXIST BB DESIGN		WEIGHT	Aprox. 50 g				DRAWN BY: / DATE: / CHECKED:
PLANT		FINISH	TO 43 FD 157 A				APPROVED BY: / COLOUR
1 2		SURFACE TREATMENT	YES				SCALE: NTS / DRAWING No. / A3 / Rev. 00