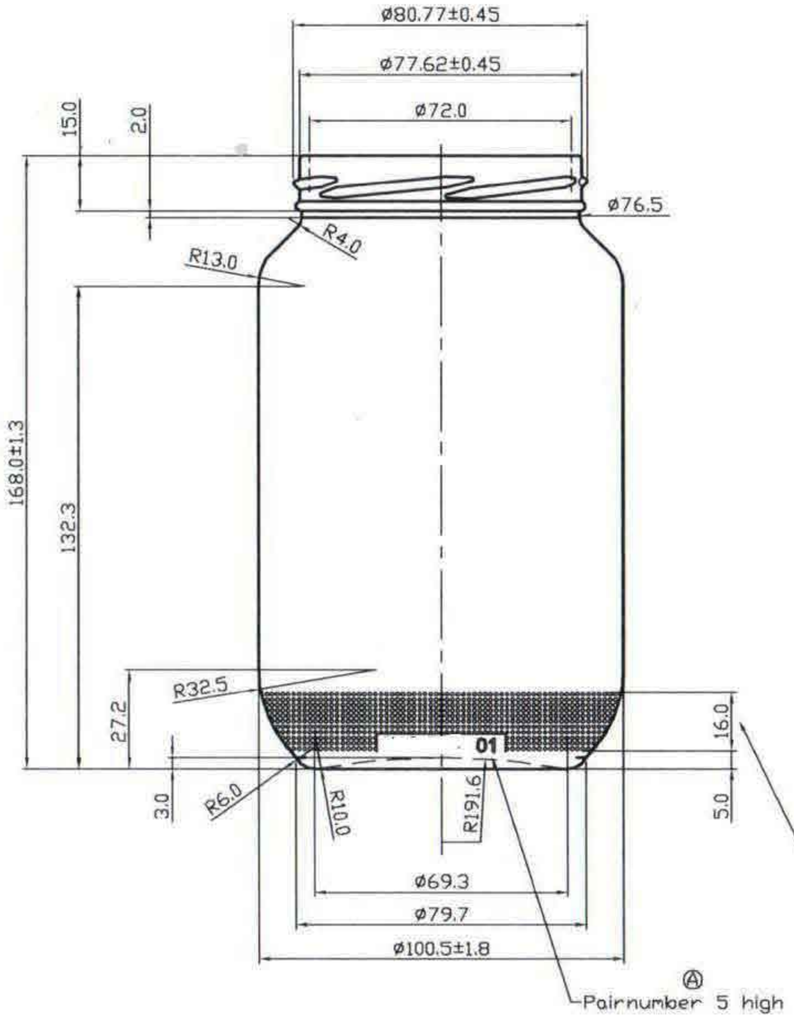

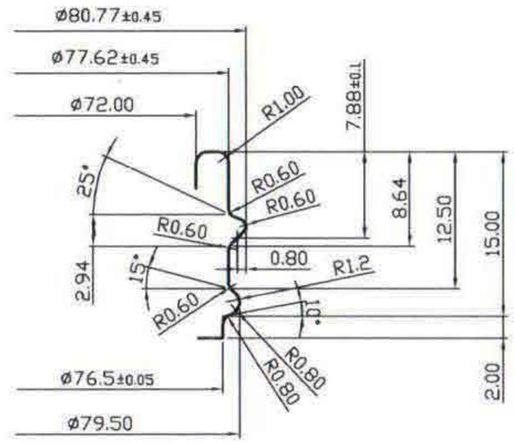

SECTION A-A
SCALE 3:1

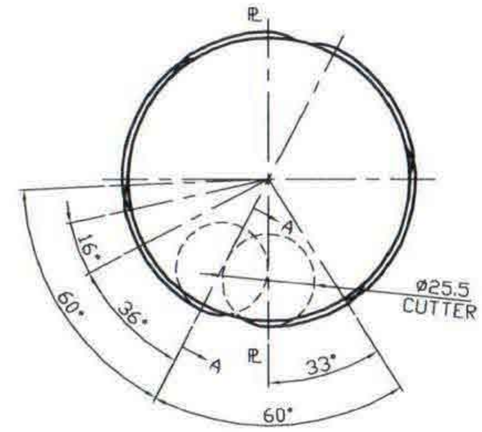

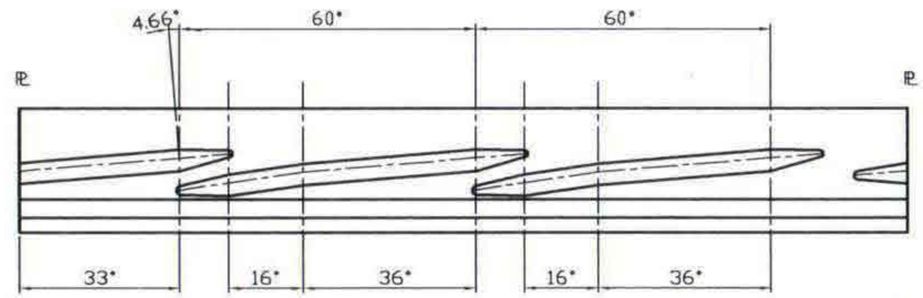

THREAD DEVELOPMENT

11 ROES STIPPLING
AROUND BTL AS SHOWN.

1.25 TURNS PERINCH FOR 4.66° ANGLE
0.75 TURNS PERINCH FOR 7.75° ANGLE
THREADCUTTER DIA 25.5

CRESCENT STIPPLE (100)
ON BEARING SURFACE

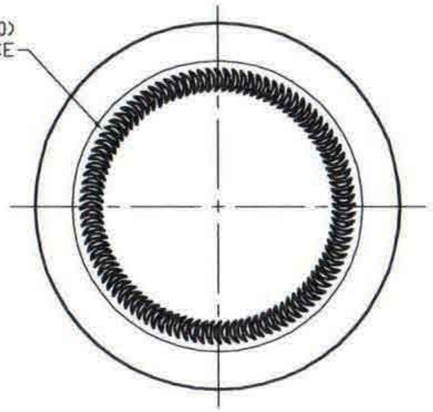

CAPACITY AT FILL POINT	1000		cl
BRIMFUL CAPACITY	1052	±10	cl
GLASS WEIGHT	400	±5	g

EDITION	CHANGE	DATE	NAME
Ⓐ	be changed to		

DATE	SIGN	CHECKED	MOLD NAME:	SCALE:
			ARTICLE FOR	
MATERIAL:			DRAWING NO.	TYPE:
			OLD DRAWING NO.	